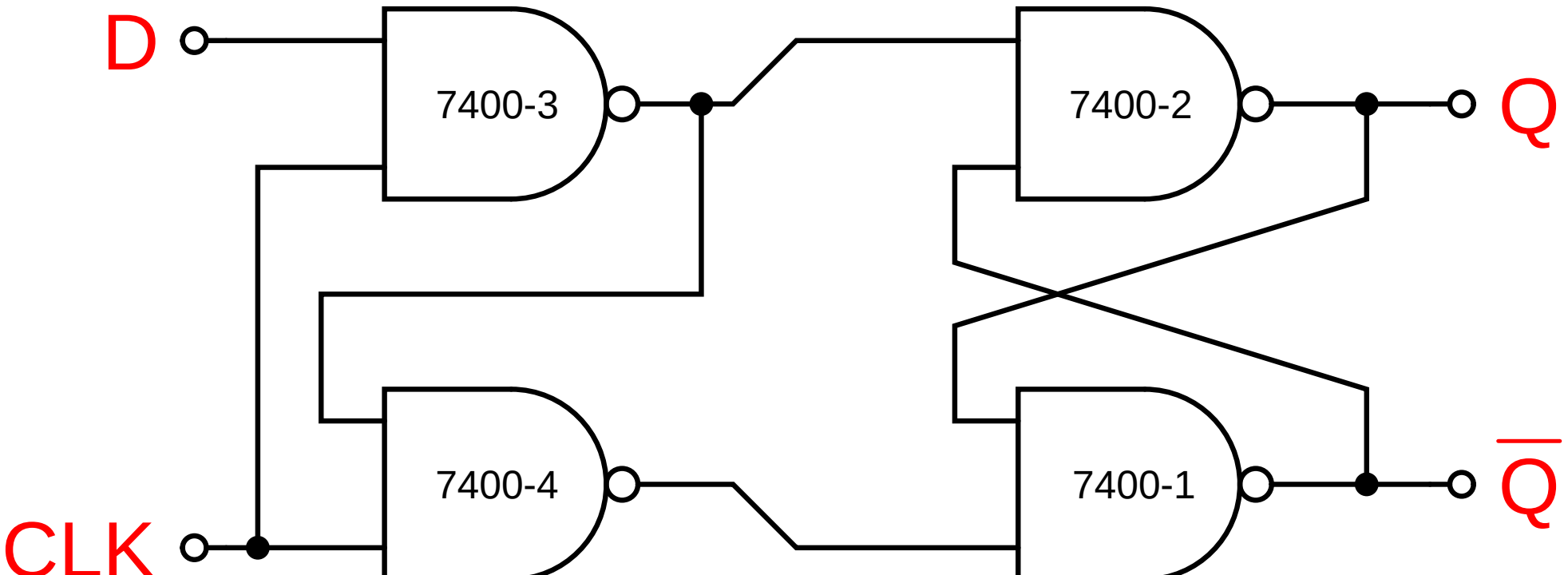D-FF implementation in 7400 IC